USB, POWER PATHS, CHARGING AND FILTERING

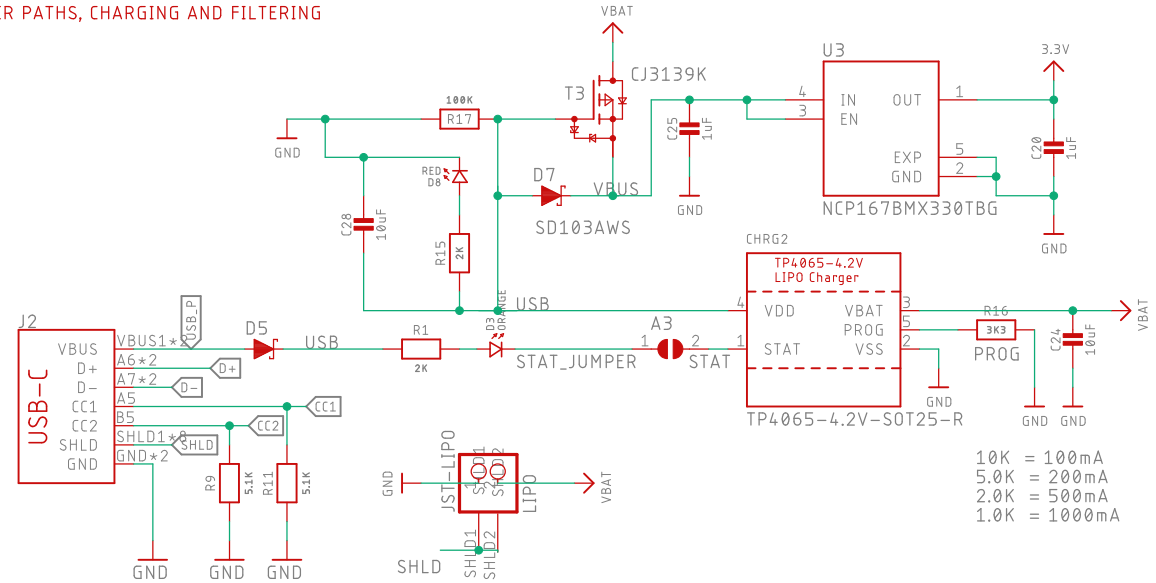

BUTTONS

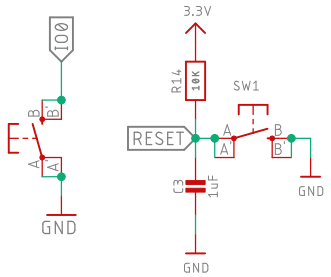

RGB LED

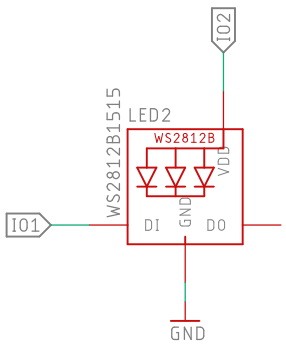

VOLTAGE SENSE DIVIDERS

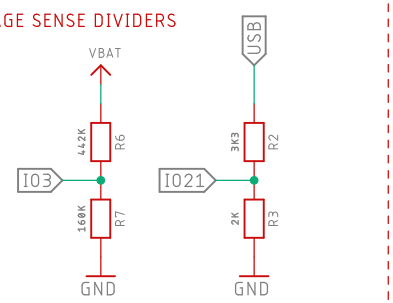

ESP32-S2

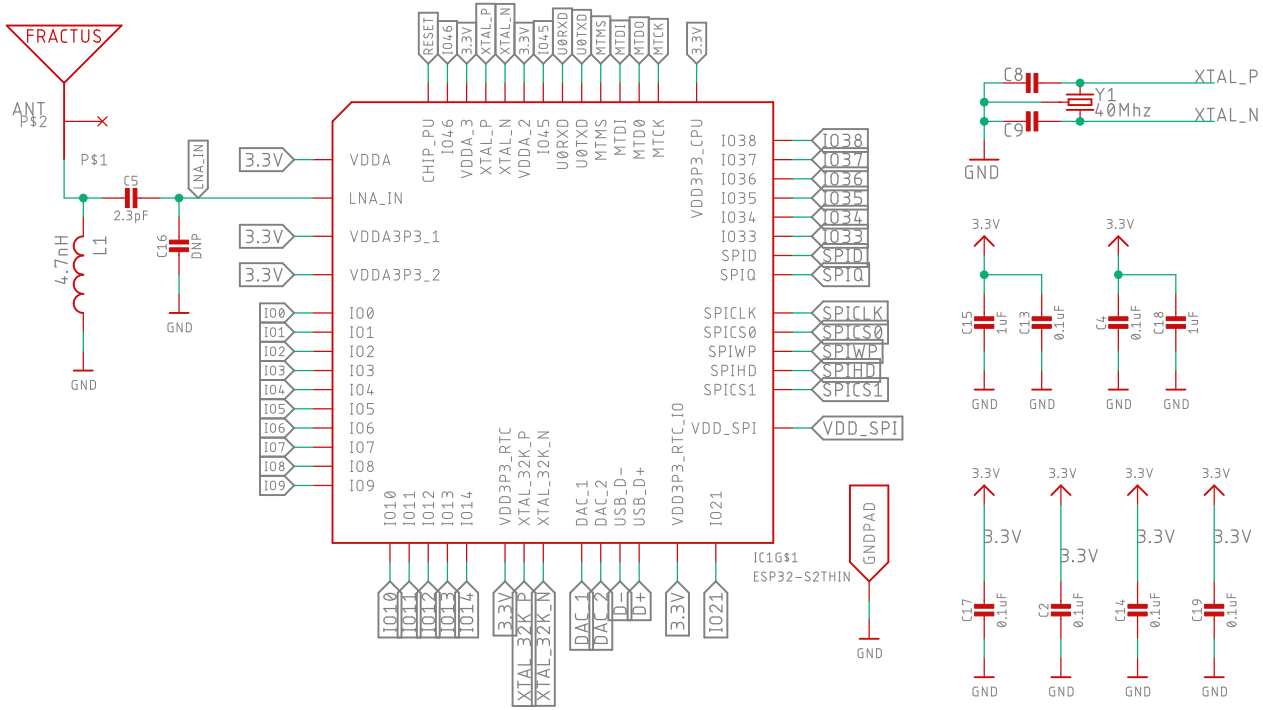

IO

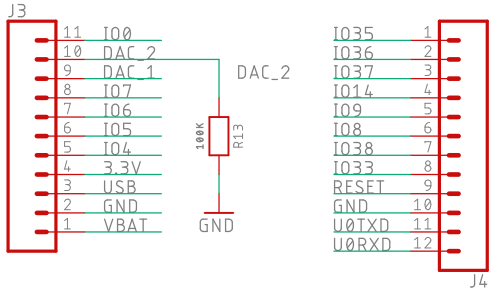

TinyS2™

Title: TinyS2	Rev: P1
April 1st, 2021	Unexpected Maker
Sheet: 1	unexpectedmaker.com